Shuttle®

SPCEL DIO Function Verification



Design Center-II
Aug-23-2024

www.shuttle.com

SPCEL DIO Read/Write

SPCEL Platform is use SIO IT8764 GPIO do DIO function.

If you want to control read/write DIO,
you need read/write IO Space **0xAA8** address

The DI is **0xAA8 bit0~bit3**
The DO is **0xAA8 bit4~bit7**

Offset	GPI/GPO	Pin
Bit0	GPI	DI_P0
Bit1	GPI	DI_P1
Bit2	GPI	DI_P2
Bit3	GPI	DI_P3
Bit4	GPO	DO_P0
Bit5	GPO	DO_P1
Bit6	GPO	DO_P2
Bit7	GPO	DO_P3

DO Behavior

DO_P0/DO_P1/DO_P2/DO_P3	Output
High	Low
Low	High

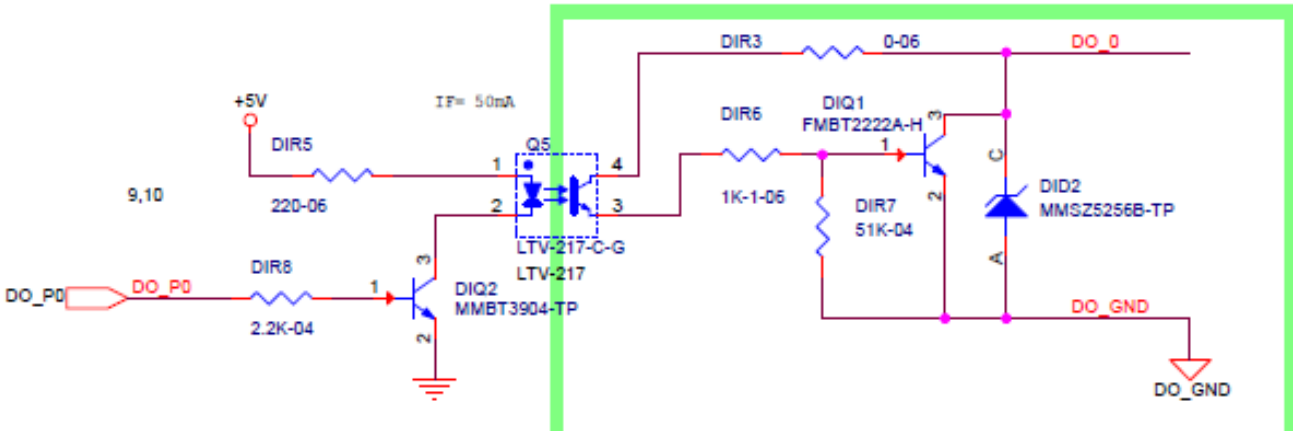

Sample code

[SPCEL DIO INPUT/OUTPUT GUIDE (C# SAMPLE)]

1. REFERENCES
https://github.com/ellysh/InpOut32
https://www.highrez.co.uk/Downloads/InpOut32/default.htm

Please download "inpout32.dll" & "inpoutx64.dll" files from github url above.
Or you can download them directly from the link below:
https://www.highrez.co.uk/scripts/download.asp?package=InpOutBinaries

Detail please refer “SPCEL DIO Input Output Guide.txt“

DIO Terminal block Pin definition



DI				
C	1	2	3	4
DI Ground	DI port 1	DI port 2	DI Port 3	DI Port 4

DO				
C	1	2	3	4
DO Ground	DO port 1	DO port 2	DO Port 3	DO Port 4

DIO Function verify with Demo app

DIO Test Loopback

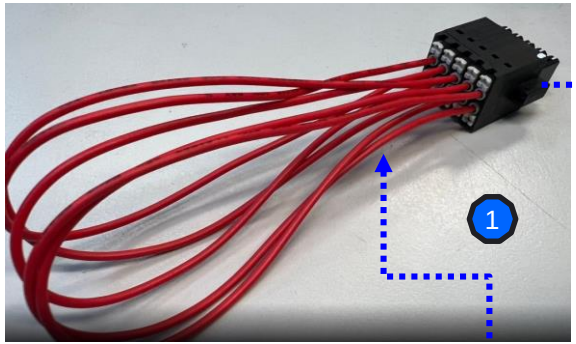



2

DI				
C	1	2	3	4
DI Ground	DI port 1	DI port 2	DI Port 3	DI Port 4

DO				
C	1	2	3	4
DO Ground	DO port 1	DO port 2	DO Port 3	DO Port 4

DIO Function verify with Demo app

DIOTestTool_20230921

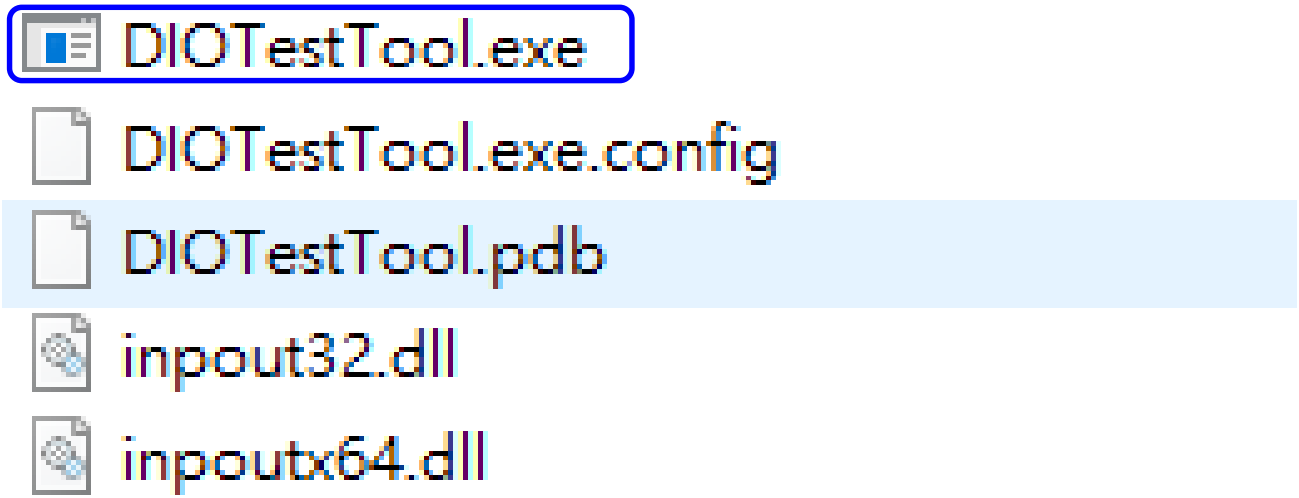

DIO Function verify (Demo app at Windows OS)

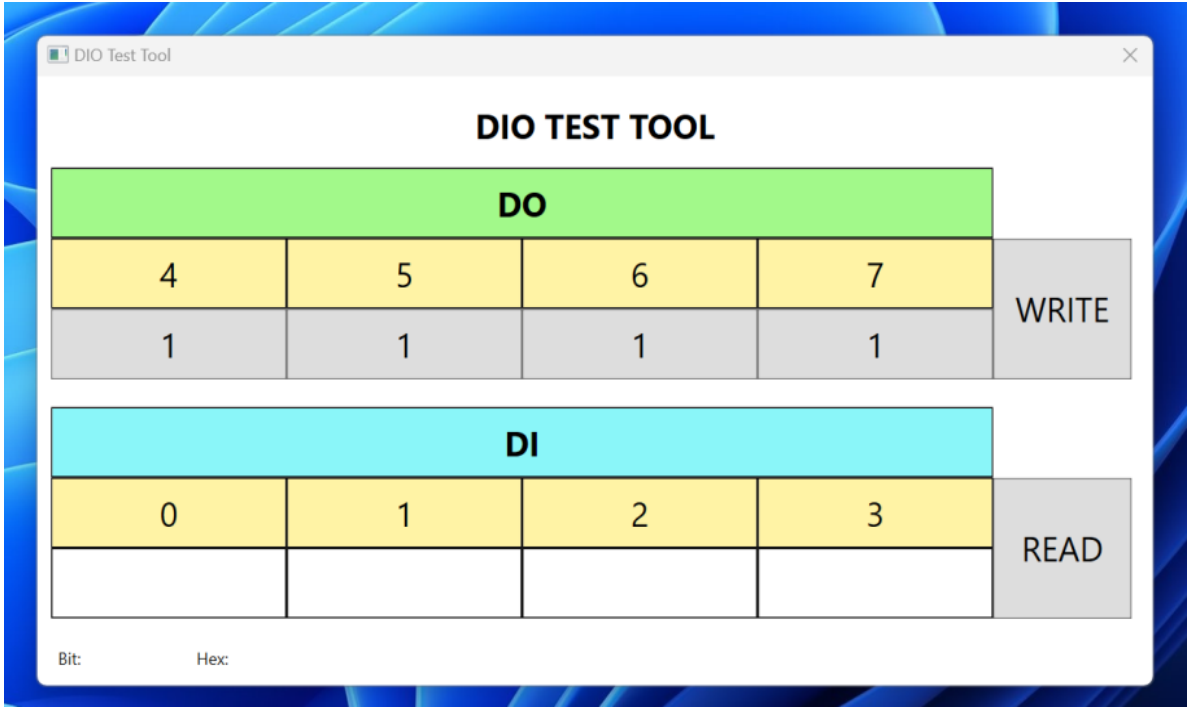



THANK YOU

Shuttle®
www.shuttle.com